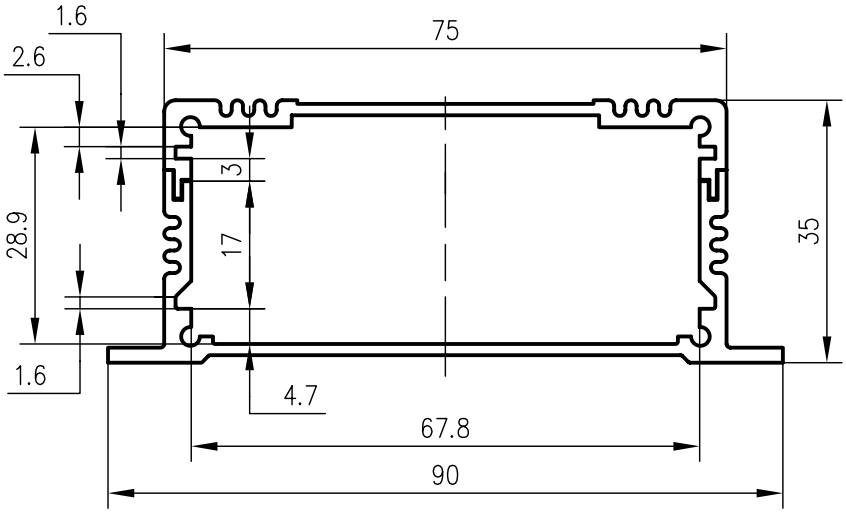
1.6
2.6
75
3
28.9
17
35
1.6
4.7
67.8
90

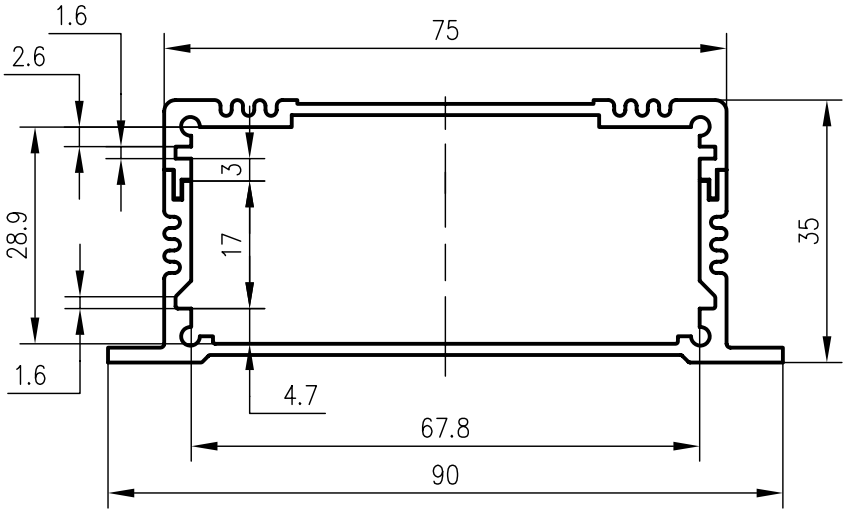
1.6
2.6
75
3
28.9
17
35
1.6
4.7
67.8
90