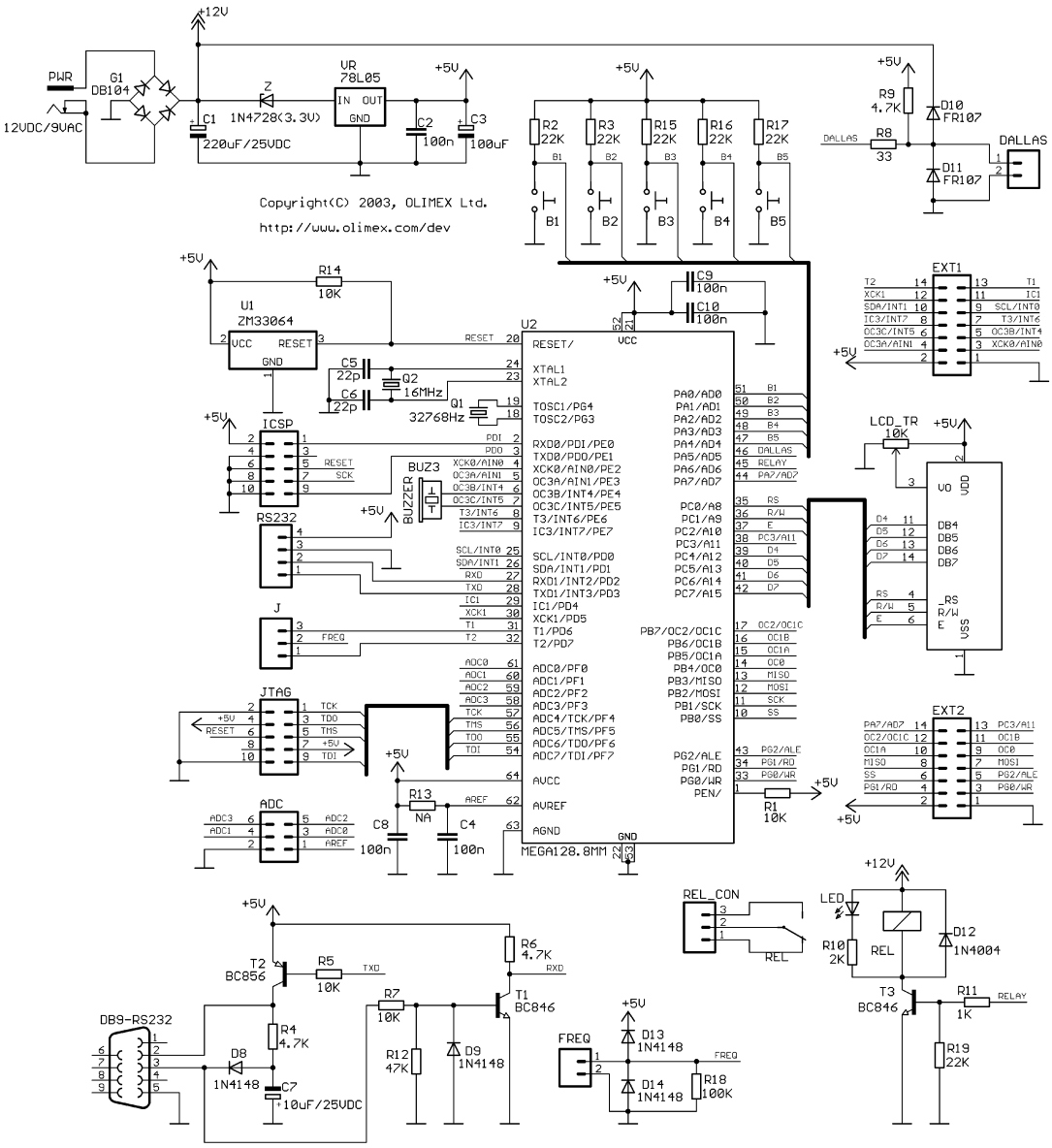
+12V
PWR
G1
DB104
12VDC/9VAC
C1
220uF/25VDC
Z
1N4728(3.3V)
VR
78L05
IN OUT
GND
+5V
C2
100n
C3
100uF
R2
22K
R3
22K
R15
22K
R16
22K
R17
22K
B1
B2
B3
B4
B5
R9
4.7K
D10
FR107
DALLAS
R8
33
D11
FR107
Copyright(C) 2003, OLIMEX Ltd.
http://www.olimex.com/dev
R14
10K
U1
ZM33064
VCC
RESET
GND
C5
22p
C6
22p
Q2
16MHz
Q1
32768Hz
C9
100n
C10
100n
U2
MEGA128.8MM
EXT1
EXT2
ICSP
BUZ3
BUZZER
RS232
J
JTAG
ADC
LCD_TR
10K
VO
VDD
VSS
R13
NA
C8
100n
C4
100n
R1
10K
REL_CON
REL
LED
R10
2K
D12
1N4004
T3
BC846
R11
1K
R19
22K
T2
BC856
R5
10K
R6
4.7K
T1
BC846
R7
10K
R12
47K
D9
1N4148
DB9-RS232
R4
4.7K
D8
1N4148
C7
10uF/25VDC
FREQ
D13
1N4148
D14
1N4148
R18
100K